JEE-O cone ceiling shower

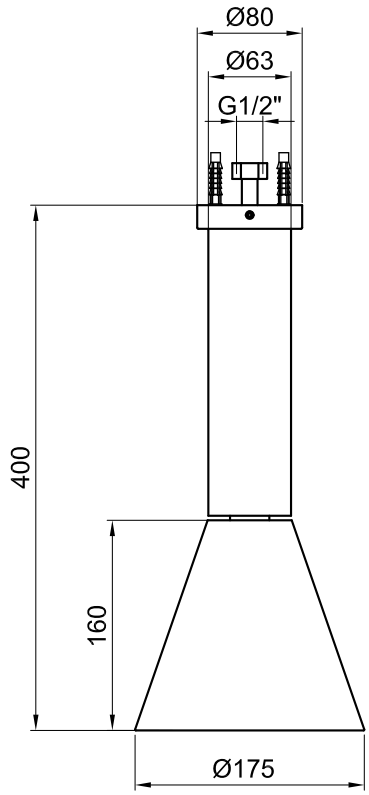



Article code:	900-6800 Brushed 900-6806 PVD coated gun metal
Material:	Stainless Steel r316
Cleaning instructions:	download JEE-O shower and taps manual on our website: www.jee-o.com
Flow at water of 38°C:	12l p/m at 3Bar pressure
Pressure:	Recommended working pressure 3Bar

Connection:	G ½" (ø15mm / 0.6")
Thread:	British Standard Pipe (BSP)
Dimension package:	L 50 x W 28 x H 22 cm
Total weight:	3.8 kg
Package weight:	1.2 kg

7 year warranty – The general conditions can be found on our website: www.jee-o.com/downloads

HS code: 84248970

Models are subject to change and specs may contain typographical errors
Slight variations in the aesthetic appearance of the product, including the color, may occur after exposure to external influences such as sunlight, pollution or harmful chemicals

JEE-O cone thermostat

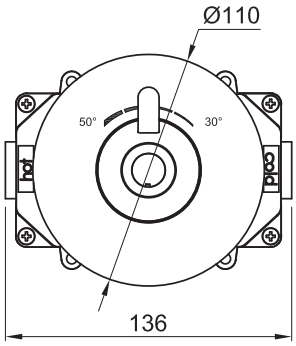

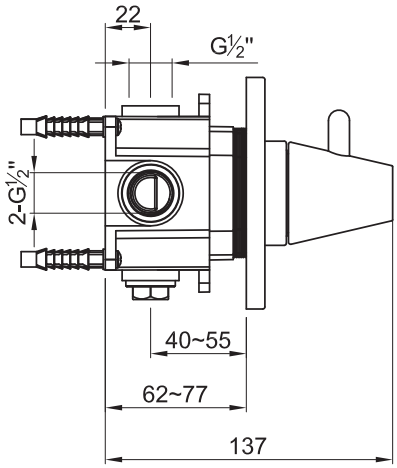



Article code:	900-2500 Brushed 900-2506 PVD coated gun metal
Material:	Stainless Steel r304
Cleaning instructions:	download JEE-O shower and taps manual on our website: www.jee-o.com
Cartridges:	Vernet mixing mechanism (thermostatic) item code 005-0501
Flow at water of 38°C:	12l p/m at 3Bar pressure
Pressure:	Recommended working pressure 3Bar

Connection:	2 x G ½" (ø15mm / 0.6")
Thread:	British Standard Pipe (BSP)
Dimension package:	L 28 x W 18 x H 16 cm
Total weight:	1.9 kg
Package weight:	0.4 kg

7 year warranty – The general conditions can be found on our website: www.jee-o.com/downloads

HS code:	84248970
Approvals:	

Models are subject to change and specs may contain typographical errors
Slight variations in the aesthetic appearance of the product, including the color, may occur after exposure to external influences such as sunlight, pollution or harmful chemicals

JEE-O cone valve

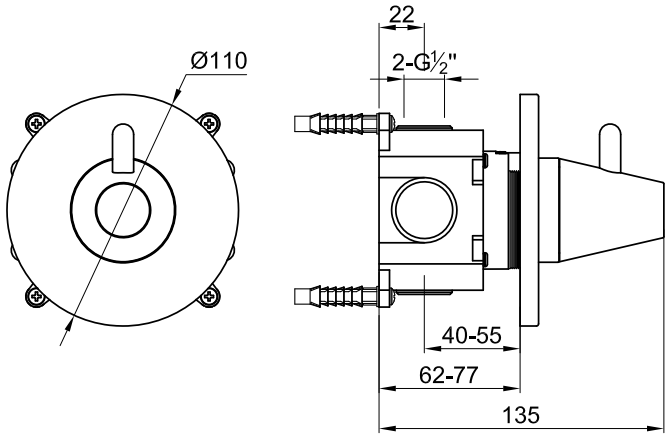





Article code:	900-2700 Brished 900-2706 PVD coated gun metal
Material:	Stainless Steel r304
Cleaning instructions:	download JEE-O shower and taps manual on our website: www.jee-o.com
Cartridges:	Fluhs ceramic valve item code 005-0602
Flow at water of 38°C:	Available soon
Pressure:	Recommended working pressure 3Bar

Connection:	2 x G ½" (ø15mm / 0.6")
Thread:	British Standard Pipe (BSP)
Dimension package:	L 25 x W 18 x H 16 cm
Total weight:	1.3 kg
Package weight:	0.3 kg

7 year warranty – The general conditions can be found on our website: www.jee-o.com/downloads

HS code: 84248970

Models are subject to change and specs may contain typographical errors
Slight variations in the aesthetic appearance of the product, including the color, may occur after exposure to external influences such as sunlight, pollution or harmful chemicals