JEE-O base for basin left

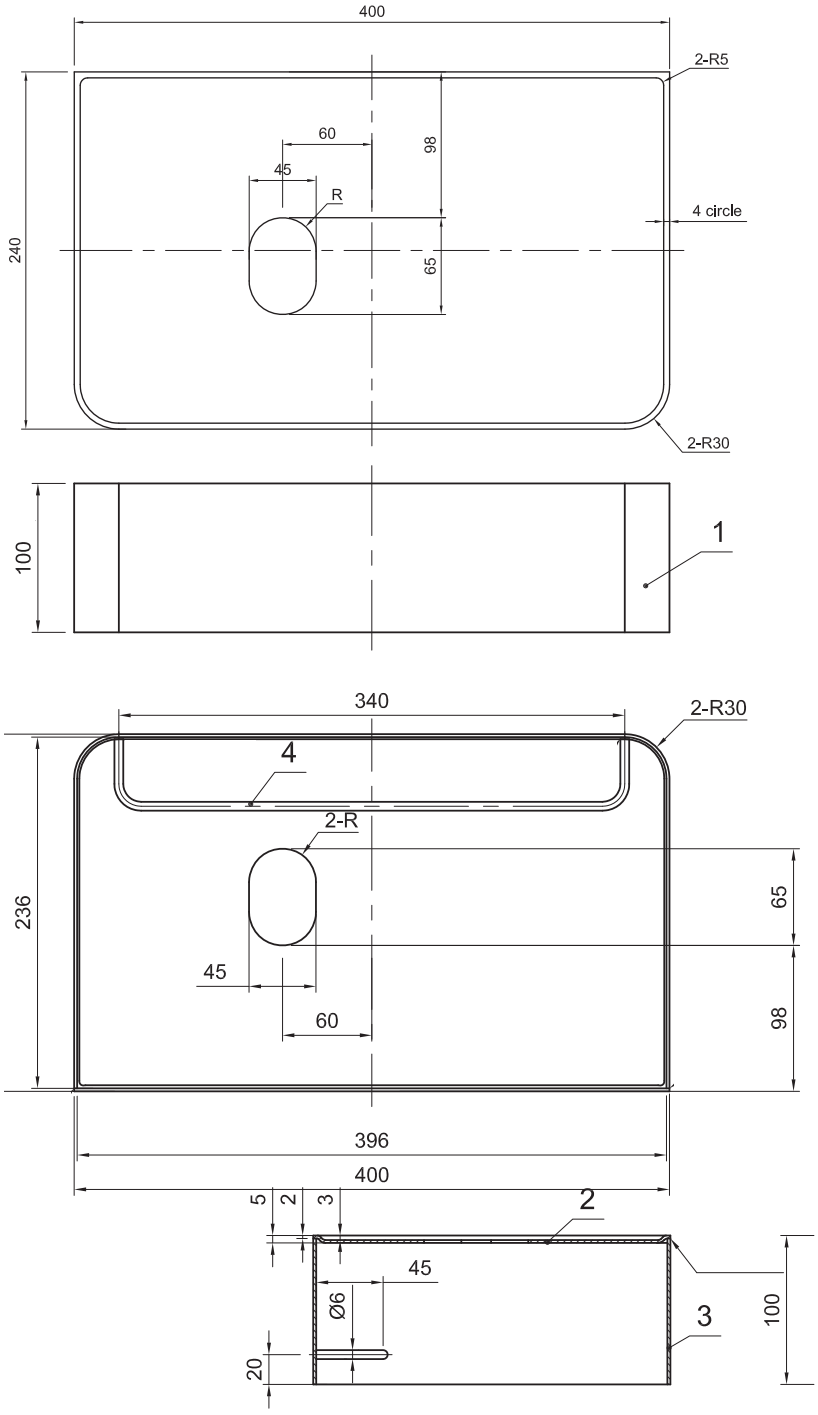





Article code:	002-1107 White 002-1103 Black
Material:	Stainless Steel r304
Cleaning instructions:	download JEE-O shower and taps manual on our website: www.jee-o.com

Dimension package:	L 47,5 x W 31,5 x H 15 cm
Total weight:	3.8 kg
Package weight:	0.75 kg

2 year warranty – The general conditions can be found on our website: www.jee-o.com/downloads

HS code: 73249000

Models are subject to change and specs may contain typographical errors
Slight variations in the aesthetic appearance of the product, including the color, may occur after exposure to external influences such as sunlight, pollution or harmful chemicals