Zinnia bath

DADO
creations europe

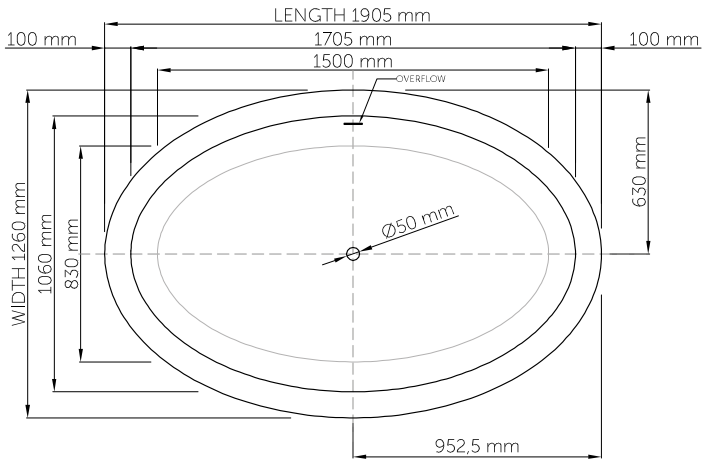



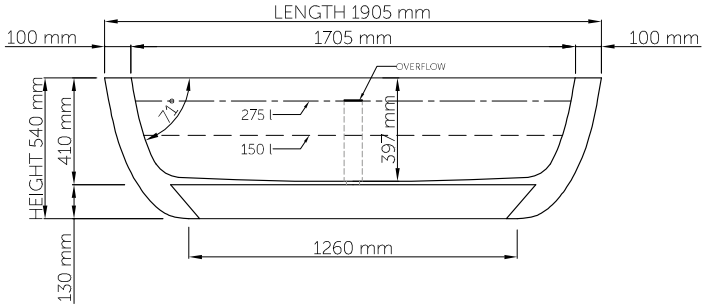

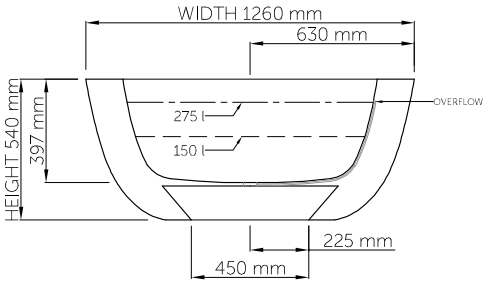





Product code:	DDC4.0

Size (L x W x H):	1905 x 1260 x 540 mm	Base dimensions (L x W):	1260 x 450 mm
Waste to floor:	130 mm	Rim width:	100 mm
Water capacity:	275L	Waste diameter:	50 mm
Overflow:	Internal overflow	Weight:	130 kg
Material:	DADOquartz	Packing dimension (L x W x H):	1960 x 1310 x 700 mm
Colour:	White	Shipping mass:	165 kg
Finish:	Matte	Including:	Bath siphon white
		HS code:	68109900

25 year warranty – The general conditions can be found on our website: www.dadocreationseurope.com/downloads

CE

The manufacturer pursues a policy of continual development and improvement and as such product specifications may be changed. All dimensions listed herein are only intended as a guide. Cast products are subject to size variants of +/- 5%. The exact colour and finish of the products may vary from those depicted in brochures and website. Full warranty terms and conditions available on the Dado Creations Europe website.