Lotus bath

DADO
creations europe

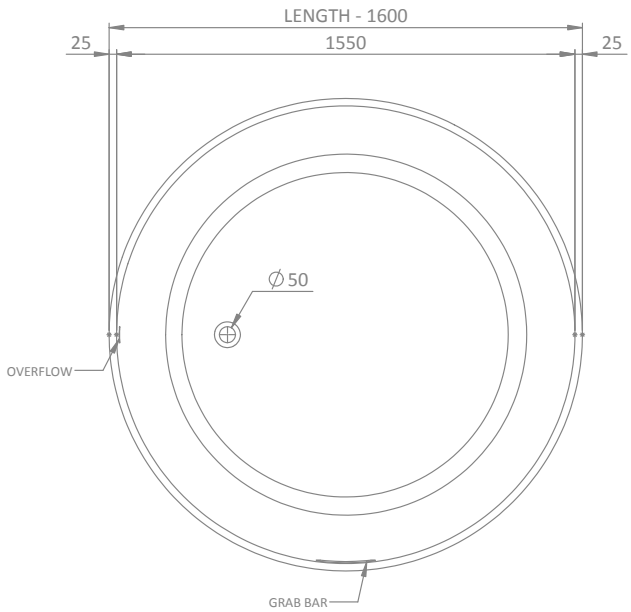



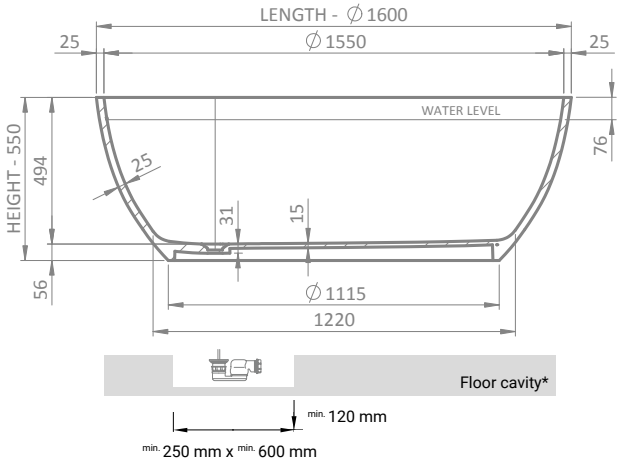



Product code:	DDC5.0

Size (L x W x H):	1600 x 1600 x 550 mm
Waste to floor:	56 mm
Water capacity:	714L
Overflow:	Internal overflow
Material:	DADOquartz
Colour:	White
Finish:	Matte

Base dimensions (L x W):	ø1115 mm
Rim width:	10 mm
Waste diameter:	50 mm
Weight:	164 kg
Packing dimension (L x W x H):	1710 x 1710 x 800 mm
Shipping mass:	230 kg
Including:	Bath siphon white

*Note. You need min. 120 mm depth and min. 250 mm width and min. 600 mm length installation space under the bath, in floor

HS code: 68109900

25 year warranty – The general conditions can be found on our website: www.dadocreationseurope.com/downloads

CE

The manufacturer pursues a policy of continual development and improvement and as such product specifications may be changed. All dimensions listed herein are only intended as a guide. Cast products are subject to size variants of +/- 5%. The exact colour and finish of the products may vary from those depicted in brochures and website. Full warranty terms and conditions available on the Dado Creations Europe website.