Cone shower combination 03
ceiling shower combination, stainless steel,
with ceiling shower, thermostat and valve

Cone douche combinatie 03
plafonddouche combinatie, rvs, met
plafonddouche, thermostaat en stopkraan

900-6430 / 900-6436

installation

900-680X

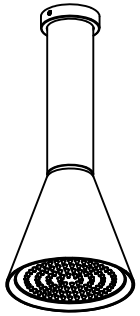

900-270X



900-250X



technical diagram

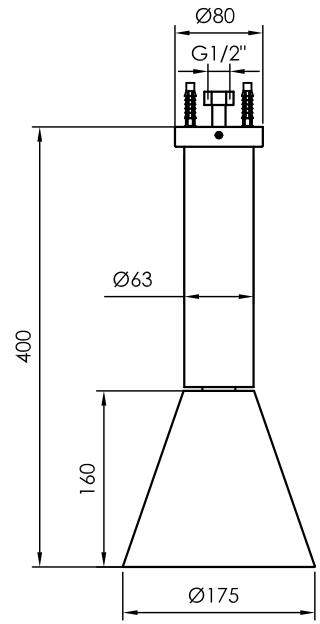

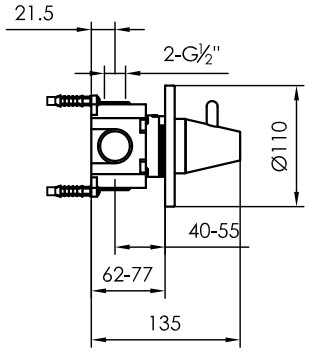

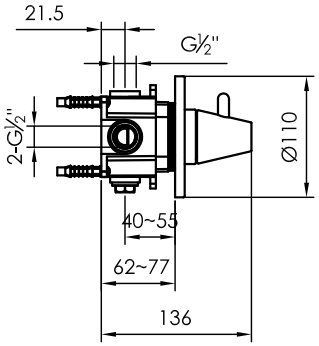

020-xxx-25xx

JEE-O

Cone ceiling mounted shower, stainless steel

Cone plafonddouche, rvs

900-6800 / 900-6806

installation

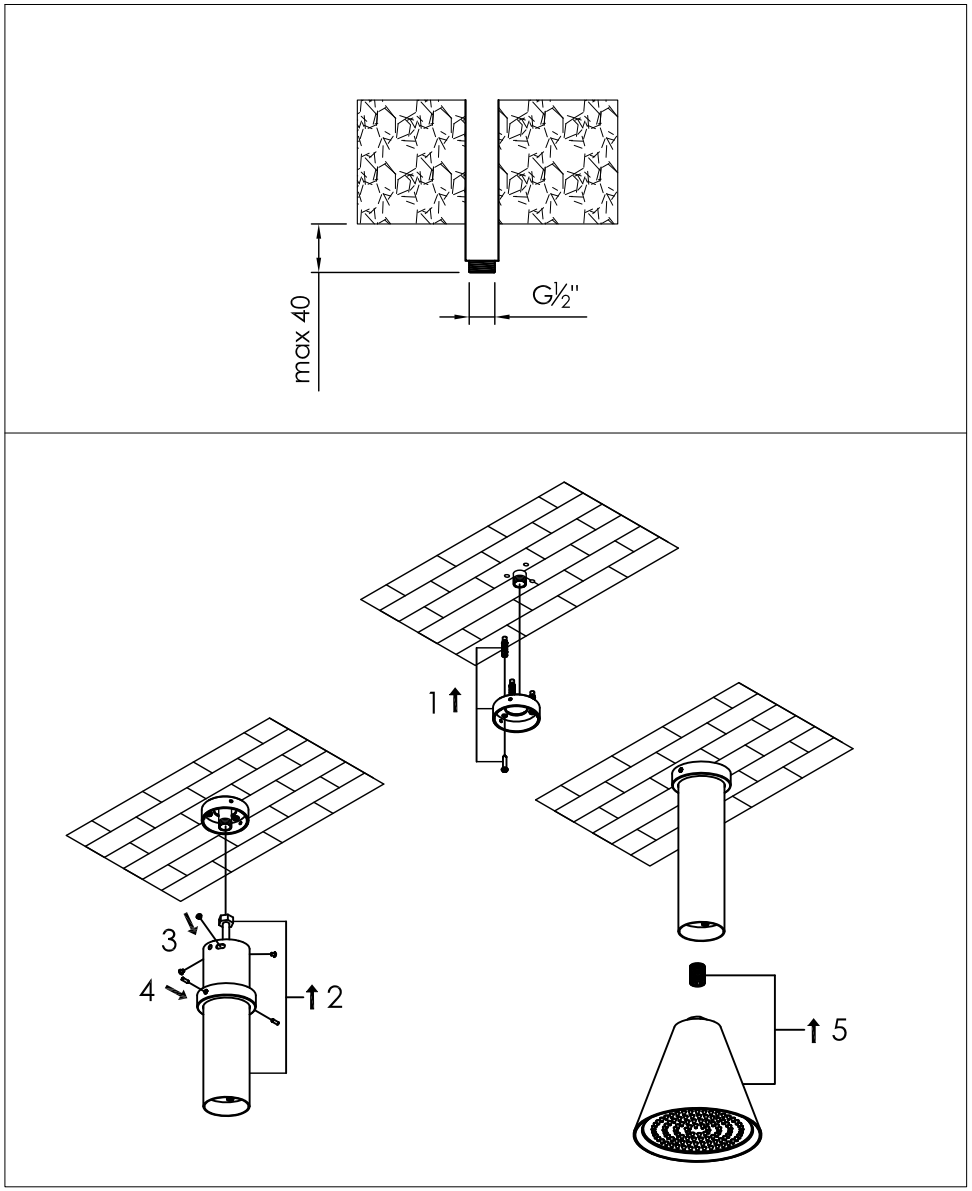

technical diagram

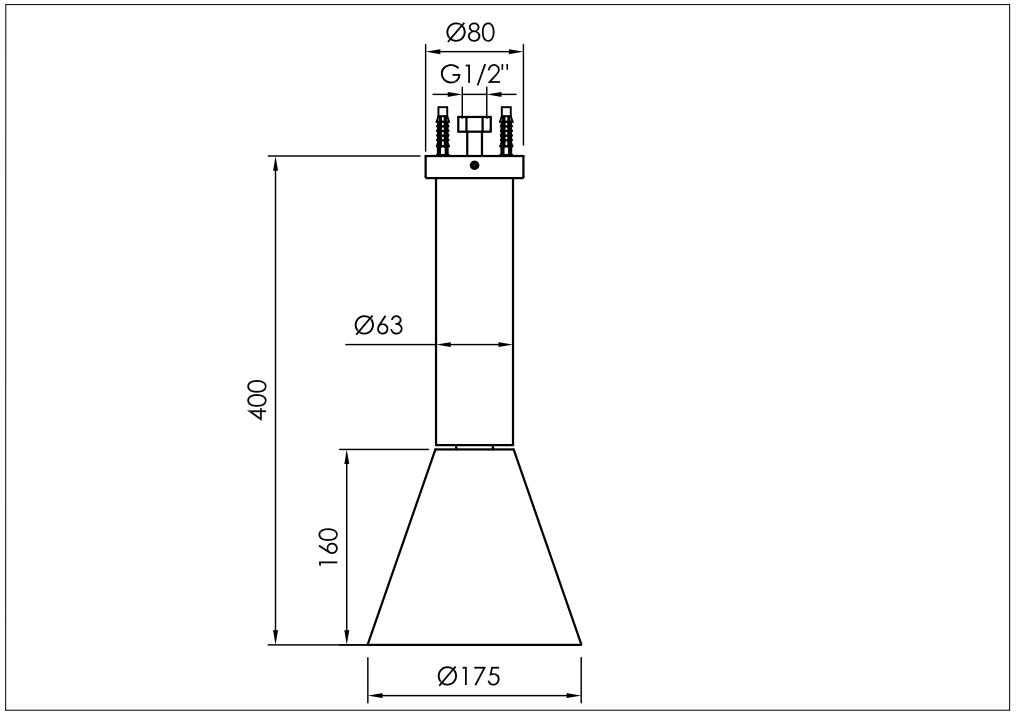

explosion diagram

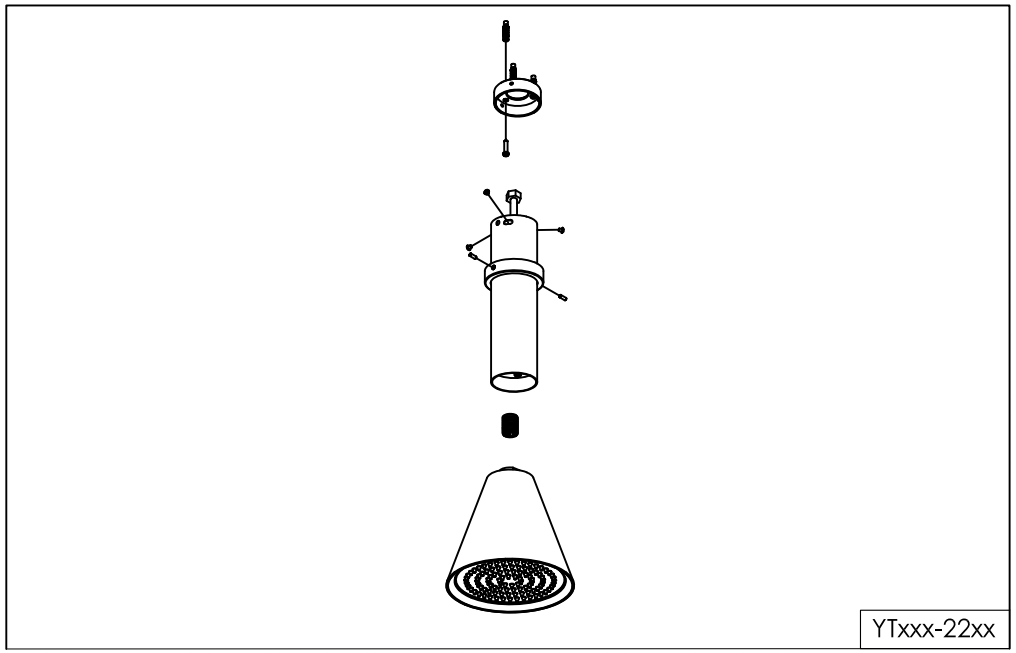

YTxxx-22xx

www.jee-o.com

wall mounted valve stainless steel with concealed body

wand inbouw stopkraan rvs

900-2700 / 900-2706

installation

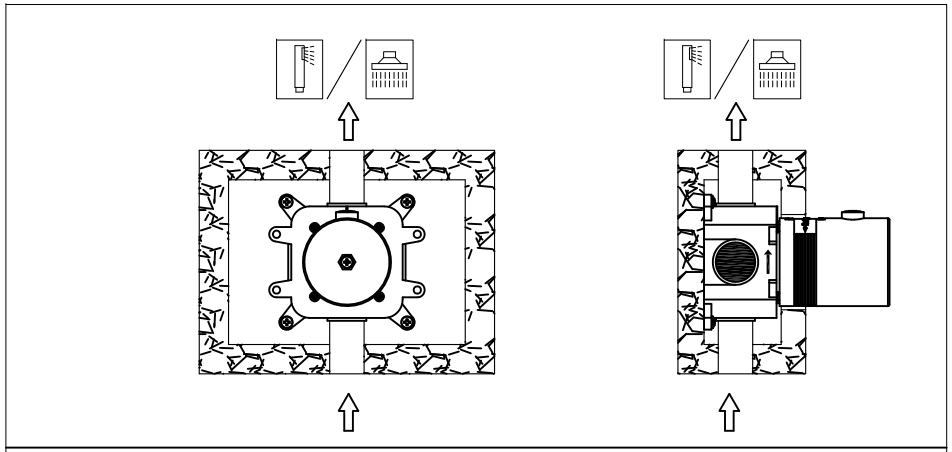

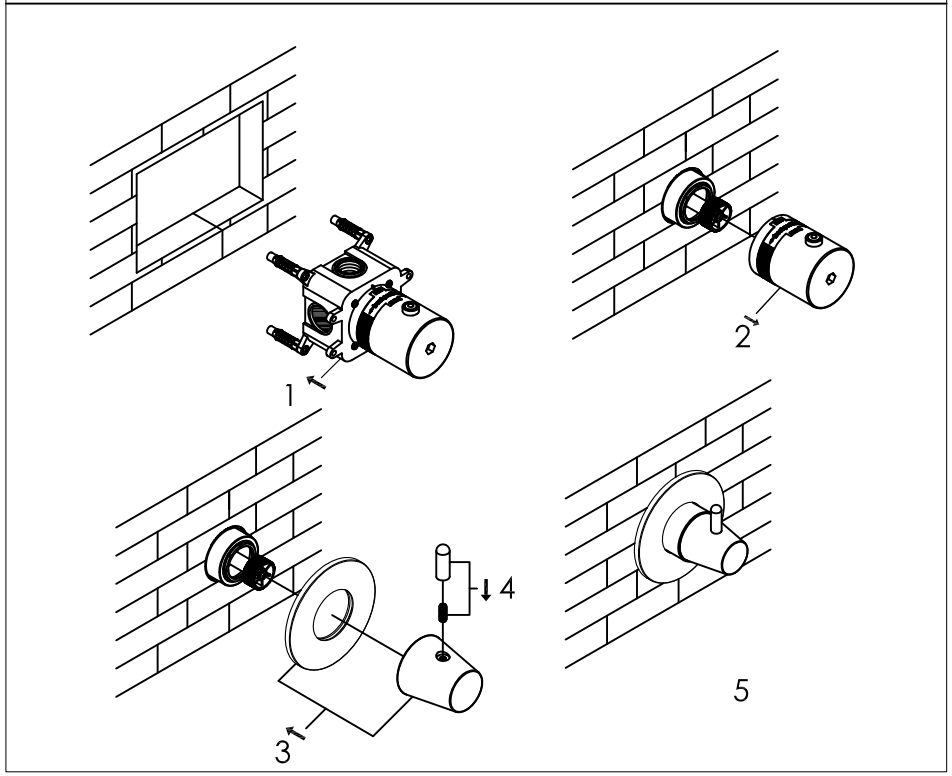

technical diagram

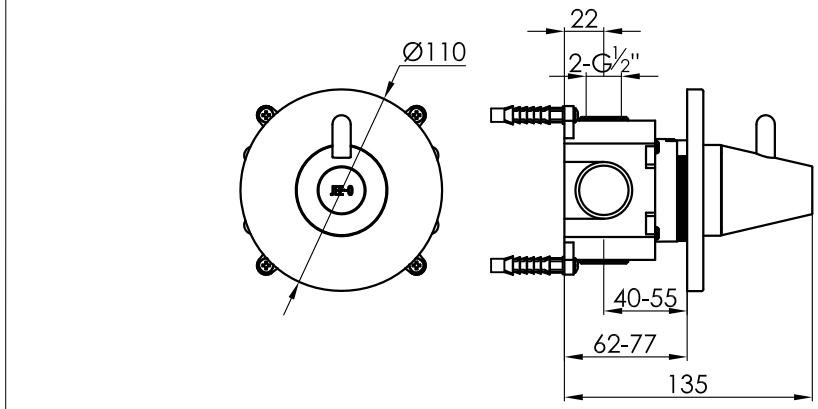

explosion diagram

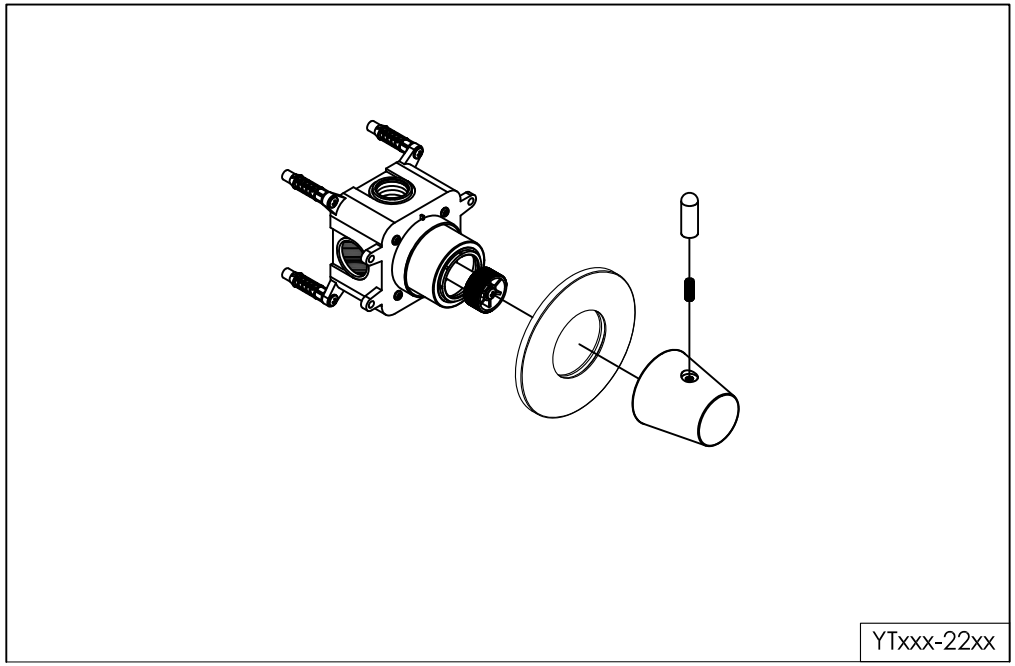

YTxxx-22xx

wall mounted thermostatic mixer stainless steel with concealed body

wand inbouwthermostaat rvs

900-2500 / 900-2506

installation

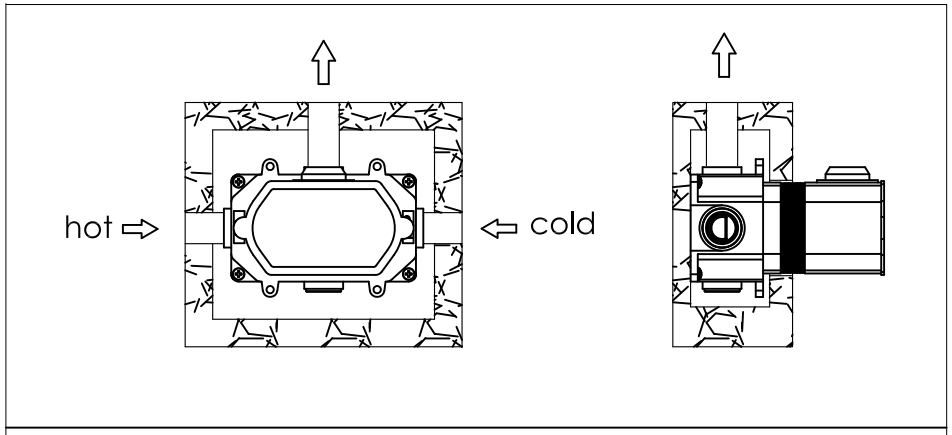

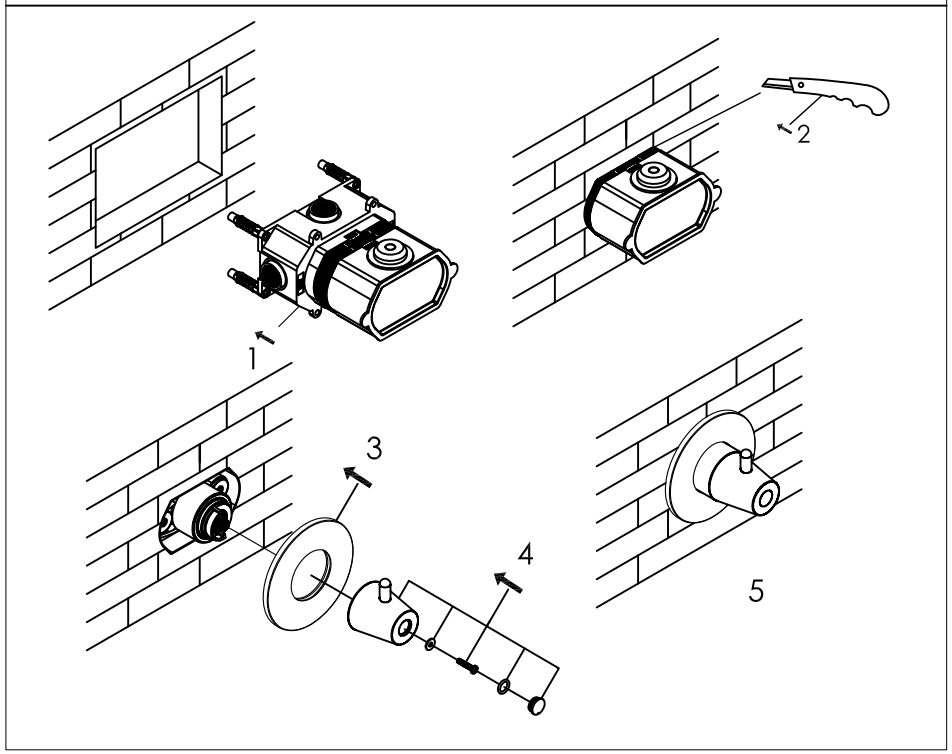

technical diagram

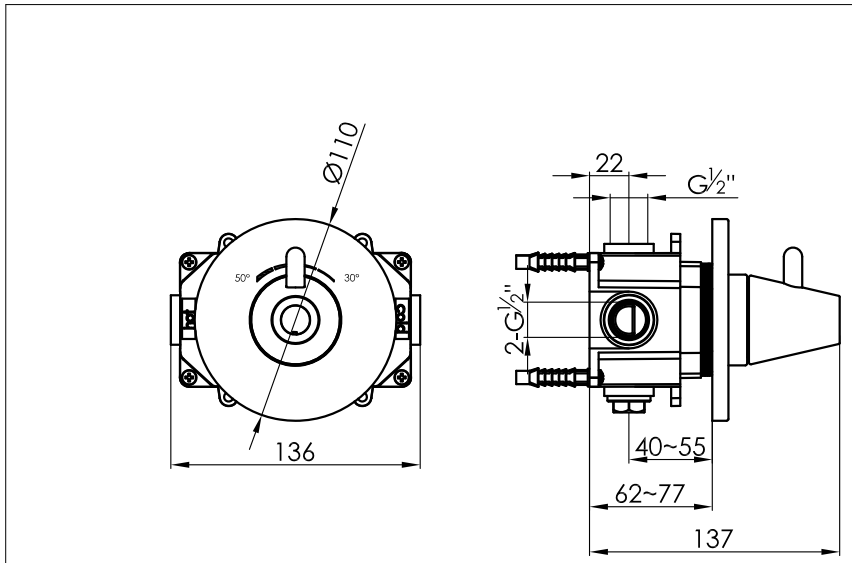

explosion diagram

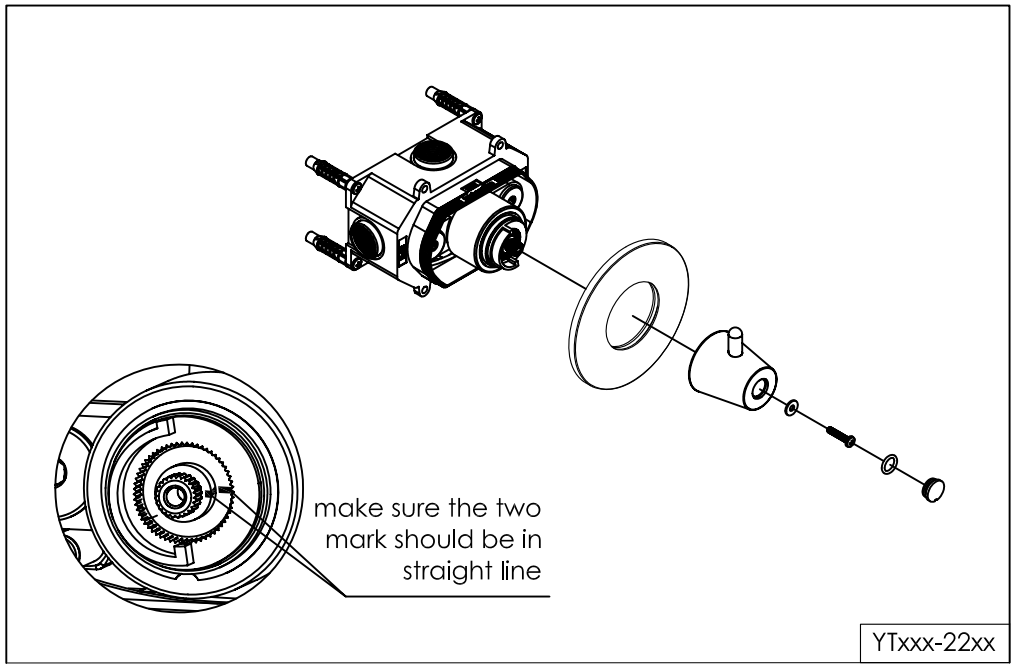

NOTE! *The rosette diameter is Ø110mm.*
Cut tiles within this diameter.

rosette diameter 110mm

tile cutting suggestion option 1 (concealed body)

tile cutting suggestion option 2

900-250X CONE THERMOSTAT

Wall mounted thermostatic mixer. Stainless steel with concealed body. All colour finishes.

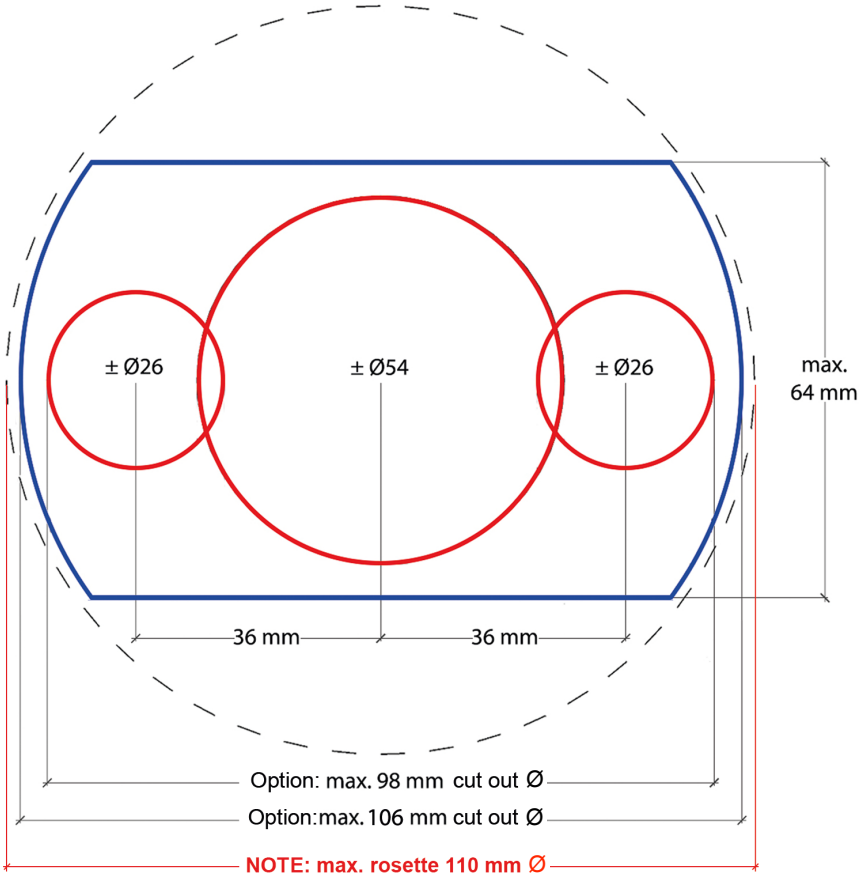

Disclaimer:
Always follow applicable guidelines and regulations for installation. These notifications and suggestions do not replace any installation manual. Installation should be carried out by certified plumber.