Version: 16062024 REVA JS

IMPERIAL

BRINGING BATHROOMS TO LIFE, FOR LIFE

Luxury Bathing	Rousham Free standing Bath

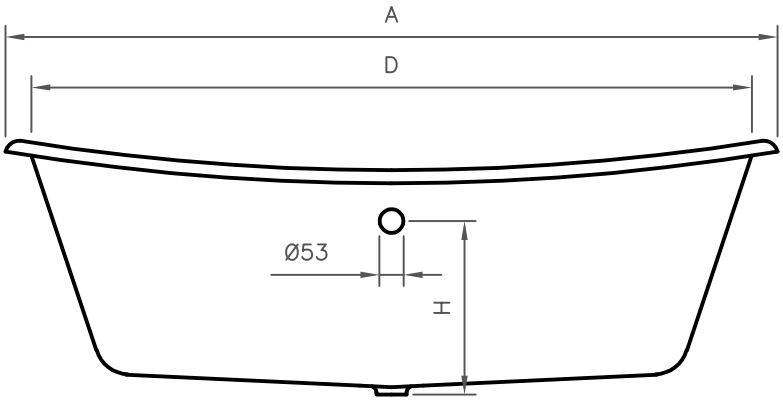

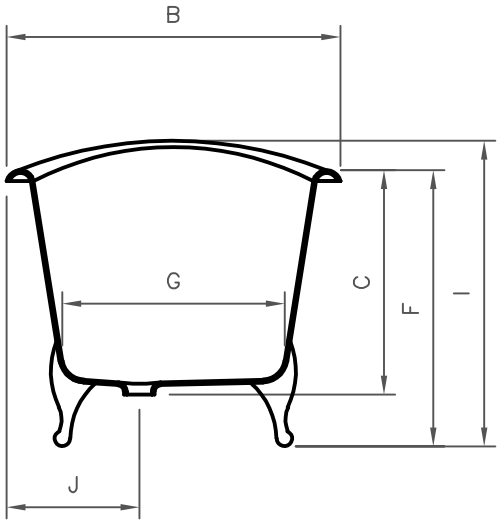

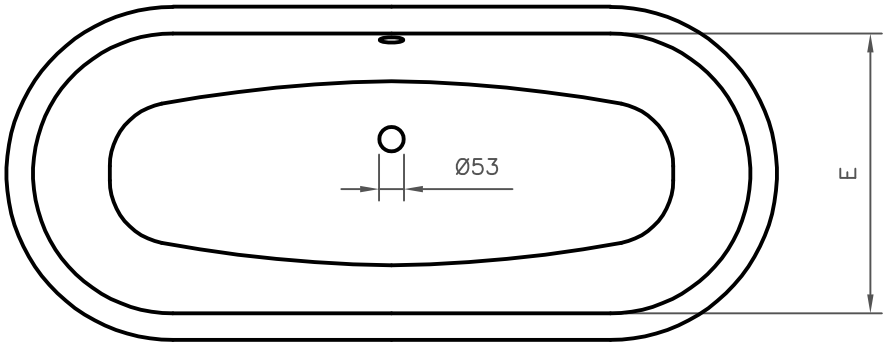



	A	B	C	D	E	F	G	H	I	J	VOL.	Weight
1700	1700	695	482	1620	595	620	410	392	673	250	215L	130KG

DRAWING NOT TO SCALE - DO NOT MEASURE FROM THIS TECH SPEC

We recommend that all products are purchased with the assistance of a specialist bathroom retailer and always installed by an experienced installer who is a member of a recognised association. All sizes quoted are nominal : items may vary by +/- 2% against the figures quoted. When planning installations where dimensions are critical, it is essential that the space allowed for the individual items is physically checked. IBC Products LTD cannot be held liable for any costs associated with items not fitting in any given area. The contents of this statement are based on information correct at the time of publication. We reserve the right to make alterations in product characteristic, fixing, packagine, operation etc. at any time without notice.

For further information on fitting guidelines, Terms and Conditions and Warranty details please refer to the Design guide or contact Imperial's Customer Service Team on 01922 743074 or sales@imperial-bathrooms.co.uk

Copyright IBC Products LTD 2024 All Rights reserved

IMPERIAL
BRINGING BATHROOMS TO LIFE, FOR LIFE

Luxury Bathing	Rousham Free standing Bath



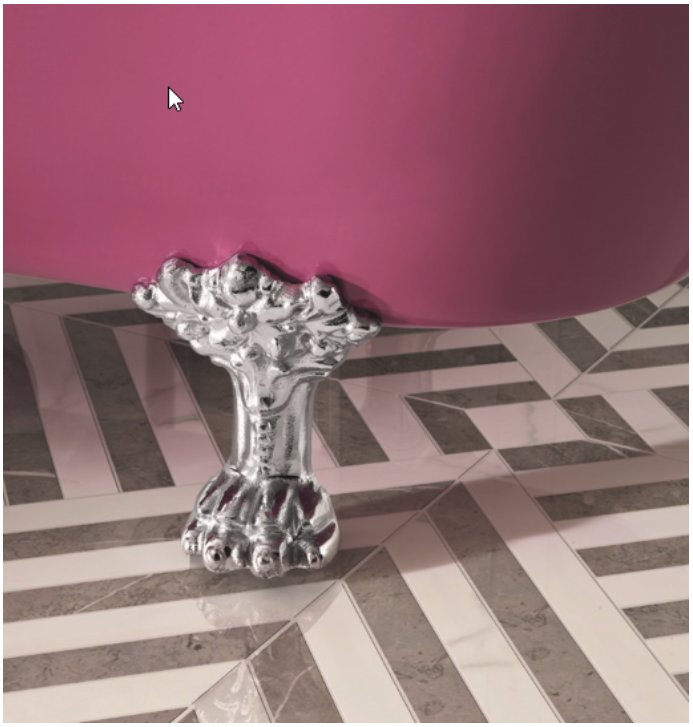

DRAWING NOT TO SCALE - DO NOT MEASURE FROM THIS TECH SPEC

We recommend that all products are purchased with the assistance of a specialist bathroom retailer and always installed by an experienced installer who is a member of a recognised association. All sizes quoted are nominal : items may vary by +/- 2% against the figures quoted. When planning installations where dimensions are critical, it is essential that the space allowed for the individual items is physically checked. IBC Products LTD cannot be held liable for any costs associated with items not fitting in any given area. The contents of this statement are based on information correct at the time of publication. We reserve the righ to make alterations in product characteristic, fixing, packagine, operation etc. at any time without notice.

For further information on fitting guidelines, Terms and Conditions and Warranty details please refer to the Design guide or contact Imperial's Customer Service Team on 01922 743074 or sales@imperial-bathrooms.co.uk

Copyright IBC Products LTD 2024 All Rights reserved