FORTY3 FOS06BI

CE EN 997:2012

GLOBO
Inspired by Life

Cod. **FOS06BI**

Wall-hung Wc No Rim 43.36 h33 cm. Average drain <3 Lt. Fixing kit included. Weight 19 Kg



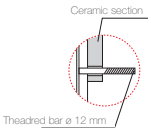

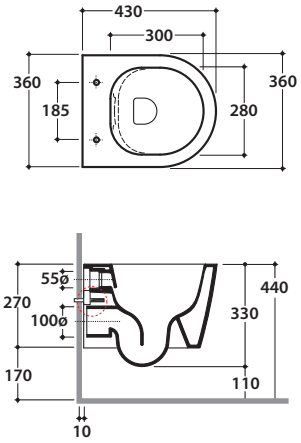

BATAFORM®

NO RIM

CERASLIDE®

Average drain < 3 lt

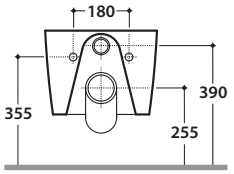

Cod. **FOR22BI**

Removable duroplast seat-cover with soft-closing system and antibacterial treatment.
Weight 3,5 Kg



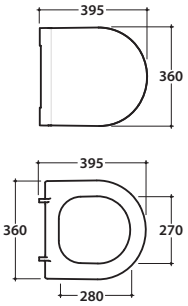

Seat-cover with hinge system to quick release

Antibacterial treatment on toilet seats in shiny white

Cod. **VA132**

Flow reductor.



Cod. **PU001**

Acoustic and crash protection.



Cod. **FI002**

Fixing brackets for W/H sanitary. Weight 2,5 Kg



CE EN 997:2012

GLOBO
Inspired by Life

Tips for proper cleaning

Ceramic cleaning

We recommend the use of warm water in combination with non-abrasive cleaning products

Cleaning of seats and hinges

Clean using only a soft sponge or cloth with mild soap and water. When using ceramic cleaning products with long-lasting effects, avoid contact with the seat and its metal parts. When using anti-limescale products for cleaning ceramic, do not keep the seat and cover of the toilet bowl lowered as exposing them to vapours could alter their shine. Coloured seats are even more delicate and prone to colour changes, if exposed even minimally to vapours. All the hinges on our seats are made of stainless steel produced exclusively in Europe (AISI 303/304). Unfortunately, incorrect cleaning and even minimal contact with vapours of substances containing hydrochloric or sulphuric acid can impair the initial shine. In fact, after incorrect use of cleaning products, the hinges may turn red, or become oxidised and rusted, even after a short time. The vapours released by these two acids have devastating effects and can corrode any material. In the case of steel, the molecular structure is not affected and there is no structural failure, only a superficial effect that, however, negatively affects its appearance.

CERASLIDE®

Is the result of years of research, on the glazes and the ceramic application, that ensures more protection, more resistance and ease of cleaning. The careful control of temperatures in the various cooking stages, in a cycle that can last up to 26 hours, ensures perfect homogeneity of the product during the sintering process, reducing porosity and guaranteeing greater resistance against stains, dirt and abrasions.

BATAFORM®

The antibacterial bataform treatment was developed to ensure deeper hygiene, basing its effectiveness on the reaction of silver ions, which inhibit the proliferation of bacteria. tests carried out by certified laboratories, according to the uni4543 standard, have confirmed a drastic decrease in the presence of bacteria, without however altering the glossy glaze. for cleaning operations, follow the recommendations given for the ceraslide glaze.

Antibacterial treatment on seats

The antibacterial resin is treated with a specific antimicrobial additive that drastically reduces the presence of germs and bacteria on the seats, keeping the surface intact and shiny for a long period of time.

Click to view or download

PDF

DOP N° V001-01

PDF

Assembly instructions wall-hung sanitary ware

Video instructions wall-hung sanitary ware

Toilet seat instruction video